BCIT Building SE-10 (Broadcast), Ground Floor

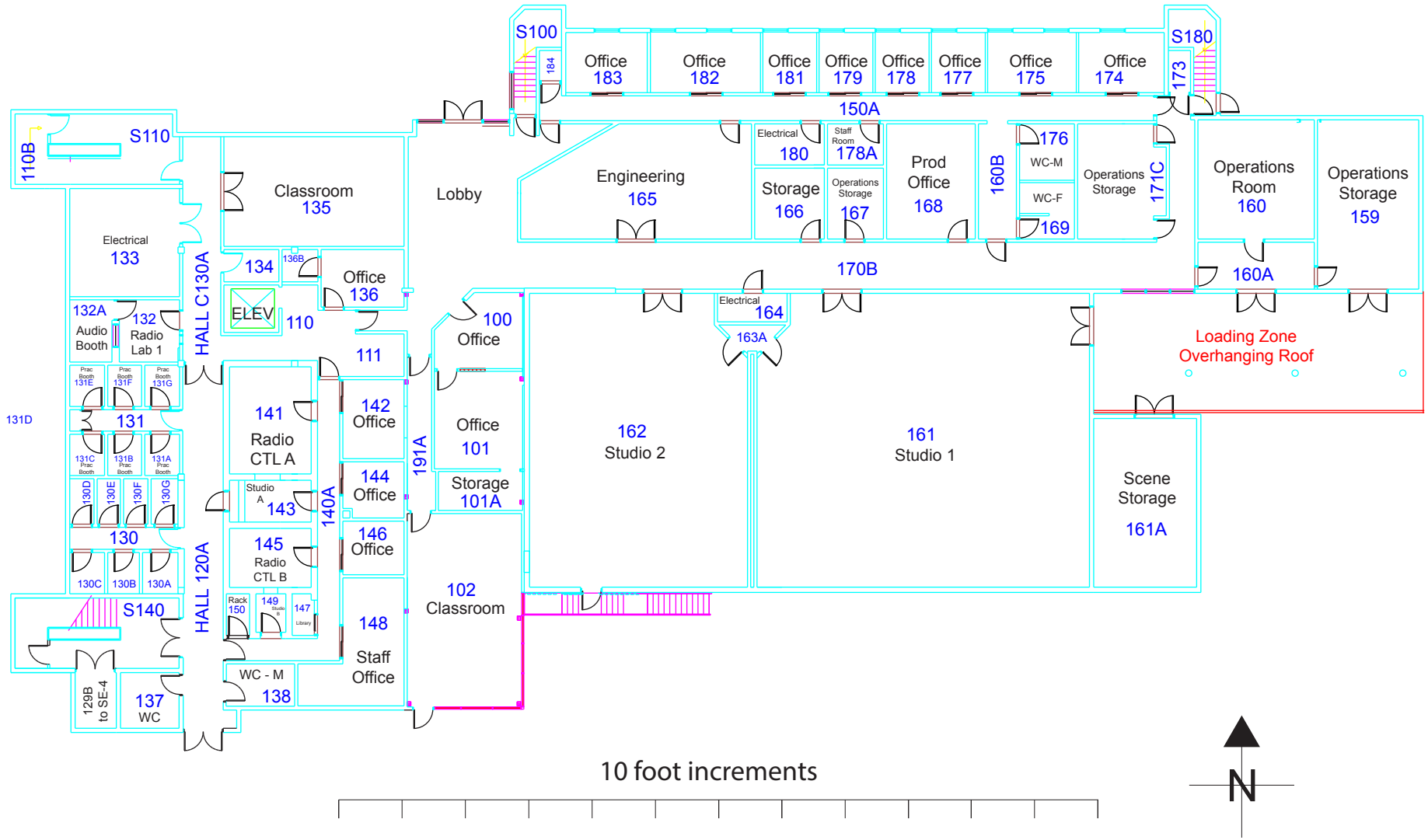

last update - Feb 2026 - d.griffiths